SCHEDULE 6

(ANNEX III to the Directive)

PART B

Noise Test Codes for Specific Equipment

Equipment that is tested free of load

0.

Basic noise emission standard

EN ISO 3744:1995

Test area

Reflecting surface of concrete or non-porous asphalt

Environmental correction K_{2A}

$K_{2A} = 0$

Measurement surface/number of microphone positions/measuring distance

(i) If the largest dimension of the reference parallelepiped does not exceed 8m: hemisphere/six microphone positions according to Part A item 5/according to Part A item 5.

(ii) If the largest dimension of the reference parallelepiped exceeds 8m: parallelepiped according to ISO 3744:1995 with measurement distance$d$ = 1m.

Operating conditions during test

Test free of load:

The noise tests shall be carried out according to Part A item 2.2.

Period(s) of observation/determination of resulting sound power level if more than one operating condition is used

The period of observation shall at least be 15 seconds.

Aerial access platforms with combustion engine

1. See No. 0

Brush Cutters

2.

Basic noise emission standard

EN ISO 3744:1995

Test area

ISO 10884:1995

Measurement surface/number of microphone positions/measuring distance

ISO 10884:1995

Operating conditions during test

Test under load

ISO 10884:1995, point 5.3

Period(s) of observation

ISO 10884:1995

Builders' hoists for the transport of goods

3. See No. 0

The geometrical centre of the engine shall be positioned above the centre of the hemisphere; the lift shall move without load and leave the hemisphere—if necessary—in direction of point 1.

Building site band saw machines

4.

Basic noise emission standard

EN ISO 3744:1995

Measurement surface/number of microphone positions/measuring distance

ISO 7960:1995, Annex J with*d* = 1m

Operating conditions during test

Test under load

Corresponding to ISO 7960:1995, Annex J (point J2(b) only)

Period of observation

Corresponding to ISO 7960:1995, Annex J

Building site circular saw benches

5.

Basic noise emission standard

EN ISO 3744:1995

Measurement surface/number of microphone positions/measuring distance

ISO 7960:1995, Annex A, measurement distance*d* = 1m

Operating conditions during test

Test under load

ISO 7960:1995, Annex A (point A2(b) only)

Period of observation

ISO 7960:1995 Annex A

Chain saws, portable

6.

Basic noise emission standard

EN ISO 3744:1995

Test area

ISO 9207:1995

Measurement surface/number of microphone positions/measuring distance

ISO 9207:1995

Operating conditions during test

Test under load/Test free of load

Full load sawing wood/engine at maximum revolution without load

(a) combustion-engine driven: ISO 9207:1995 points 6.3 and 6.4

(b) electric-motor operated: a test corresponding to ISO 9207:1995 point 6.3 and a test with the motor at maximum revolution without load

Period(s) of observation/determination of resulting sound power level if more than one operating condition is used

ISO 9207:1995 points 6.3 and 6.4

The resulting sound power level Lwa is calculated by:

$$Lwa = 10\lg\tfrac{1}{2}(10_{0.1LW1} + 10_{0.1LW2})$$

WhereLw1 and Lw2 are the average sound power levels of the two different modes of operation defined above

Combined High Pressure Flushers and Suction Vehicles

7. If it is possible to operate both items of equipment simultaneously, this shall be done according to numbers 26 and 52. If not, they shall be measured separately and the higher values are to be stated.

Compaction Machines

8.

(i) **Non-vibrating rollers**

See No. 0

(ii) **Vibrating rollers for ride-on operators**

Basic noise emission standard

EN ISO 3744:1995

Operating conditions during test

Mounting of equipment

The vibrating roller shall be installed on one or more appropriate elastic material(s) such as air-cushion(s). These air-cushions shall be made of a supple material (elastomer or similar) and shall

be inflated to a pressure ensuring that the machine is elevated by at least 5 cm; resonance effects shall be avoided. The dimension of the cushion(s) shall be such that the stability of the machine under test is ensured.

Test under load

The machine shall be tested in a stationary position with the engine at rated speed (stated by the manufacturer) and the moving mechanism(s) disconnected. The compacting mechanism shall be operated using the maximum compaction power corresponding to the combination of the highest frequency and the highest possible amplitude for that frequency as declared by the manufacturer.

Period of observation

The period of observation shall be at least 15 seconds.

(iii) **Vibratory plates, vibratory rammers, explosive rammers and walk-behind vibrating rollers**

Basic noise emission standard

EN ISO 3744:1995

Test area

EN 500-4 rev. 1:1998, Annex C

Operating conditions during test

Test under load

EN 500-4 rev. 1:1998, Annex C

Period of observation

EN 500-4 rev. 1:1998, Annex C

Compressors

9.

Basic noise emission standard

EN ISO 3744:1995

Measurement surface/number of microphone positions/measuring distance

hemisphere/six microphone positions according to Part A item 5/according to Part A item 5

or

parallelepiped according to ISO 3744:1995 with measurement distance*d* = 1m

Operating conditions during test

Mounting of equipment

The compressors shall be installed on the reflecting plane; skid-mounted compressors shall be placed on a support 0.40 m high, unless otherwise required by the manufacturer's conditions of installation.

Test under load

The compressor under test shall have been warmed up and be operating in stable conditions as for continuous operation. It shall be properly serviced and lubricated as specified by the manufacturer.

The determination of the sound power level shall be made at full-load or in an operating condition that is reproducible and is representative of the noisiest operation of typical usage of the machine under test, whichever is the noisiest.

Should the layout of the complete plant be such that certain components, e.g. inter-coolers are mounted away from the compressor, endeavours shall be made to separate the noise generated from such parts when performing the noise test. Separation of the various noise sources may require special equipment for the attenuation of the noise from these sources during the measurement. The noise characteristics and description of the operating conditions of such parts shall be given separately in the test report.

During test the gas exhausted from the compressor shall be piped clear of the test area. Care shall be taken to ensure the noise generated by the gas being exhausted is at least 10 dB lower than the noise to be measured at all measurement locations (e.g. by the fitting of a silencer).

Care shall be taken that air discharge does not introduce any extra noise due to turbulence at the compressor discharge valve.

Period of observation

The period of observation shall be at least 15 seconds.

Concrete-breakers and picks, hand-held

10.

Basic noise emission standard

EN ISO 3744:1995

Measurement surface/number of microphone positions/measuring distance

Hemisphere/six microphone positions according to Part A item 5 and the following table/according to mass of equipment as given in the following table:

Mass of equipment*m* in kg	**Radius of hemisphere**	***z* for microphone positions 2, 4, 6 and 8**
$m < 10$	2m	0.75m
$m \geq 10$	4m	1.50m

Operating conditions during test

Mounting of equipment

All appliances shall be tested in the vertical position.

If the test appliance has got an air exhaust, its axis shall be equidistant from two microphone positions. The noise of the power supply shall not influence the measurement of the noise emission from the tested appliance.

Support of the appliance

The appliance shall be coupled during the test run to a tool embedded in a cube-shaped concrete block placed in a concrete pit, sunk into the ground. An intermediate steel piece may be inserted during tests between the appliance and the support tool. This intermediate piece shall form a stable structure between the appliance and the support tool. Figure 10.1 incorporates these requirements.

Block characteristics

The block shall be in the shape of a cube 0.60 m±2 mm long at the edge and as regular as possible; it shall be made of reinforced concrete and thoroughly vibrated in layers of up to 0.20 m to avoid excessive sedimentation.

Quality of the concrete

The quality of the concrete shall correspond to C 50/60 of ENV 206.

The cube shall be reinforced by 8 mm-diameter steel rods without ties, each rod being independent of the other; the design concept is illustrated in figure 10.2.

Supporting tool

The tool shall be sealed into the block and shall consist of a rammer of no less than 178 mm or no more than 220 mm diameter and a tool chuck component identical to that normally used with the appliance being tested and complying with ISO 1180:1983, but sufficiently long to enable the practical test to be carried out.

Suitable treatment shall be carried out to integrate the two components. The tool shall be fixed in the block so that the bottom of the rammer is 0.30 m from the upper face of the block (see Figure 10.2).

The block shall remain mechanically sound, particularly at the point where the supporting tool and the concrete meet. Before and after each test, it shall be established that the tool sealed in the concrete block is integrated with it.

Positioning of the cube

The cube shall be set in a pit cemented throughout, covered by a screening slab of at least 100 kg/m^2, as indicated in Figure 10.3, so that the upper surface of the screening slab is flush with the ground. To avoid any parasitic noise, the block shall be insulated against the bottom and sides of the pit by elastic blocks, the cut-off frequency of which shall not be more than half the striking rate of the appliance tested, expressed as strokes per second.

The opening in the screening slab through which the tool chuck component passes shall be as small as possible and sealed by a flexible sound-proof joint.

Test under load

The appliance tested shall be connected to the supporting tool.

The test appliance shall be operated in stable conditions having the same acoustical stability as in normal service.

The test appliance shall be operated at the maximum power specified in the instructions supplied to the purchaser.

Period of observation

The period of observation shall at least be 15 seconds.

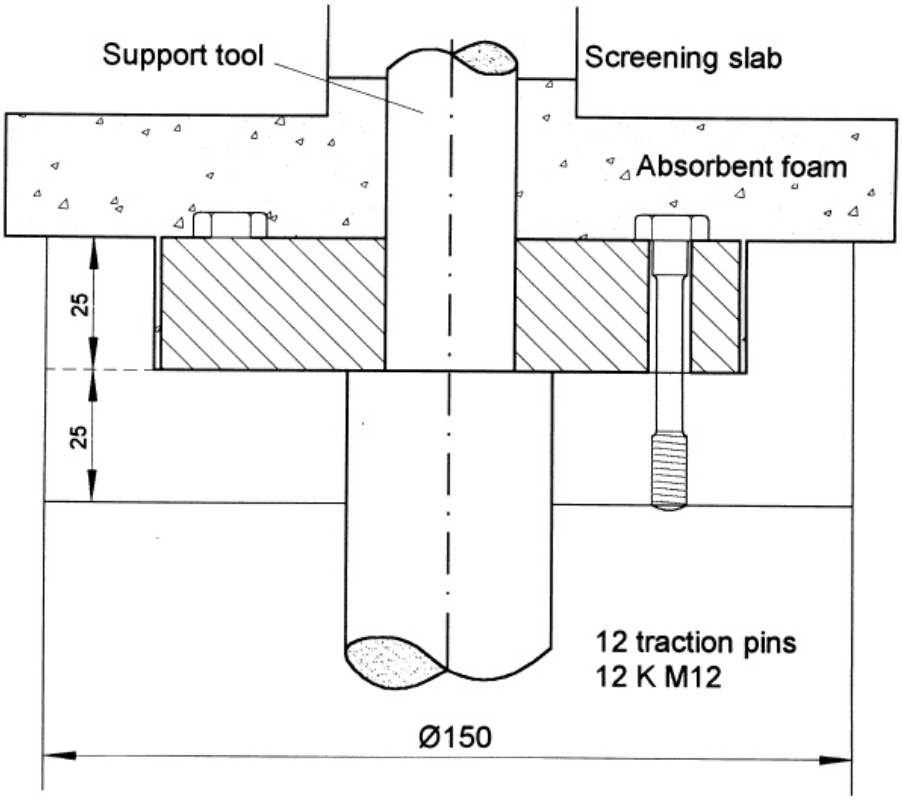

Figure 10.1 **Schematic diagram of intermediate piece**

Figure 10.2

Test block

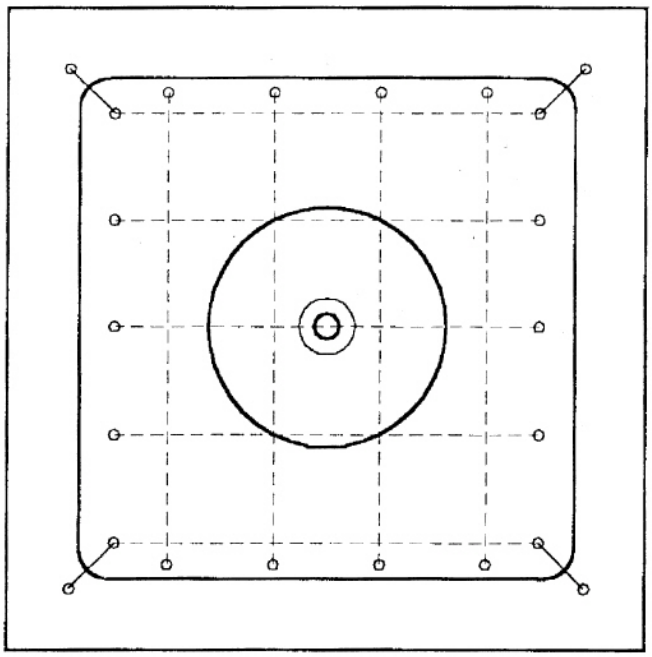

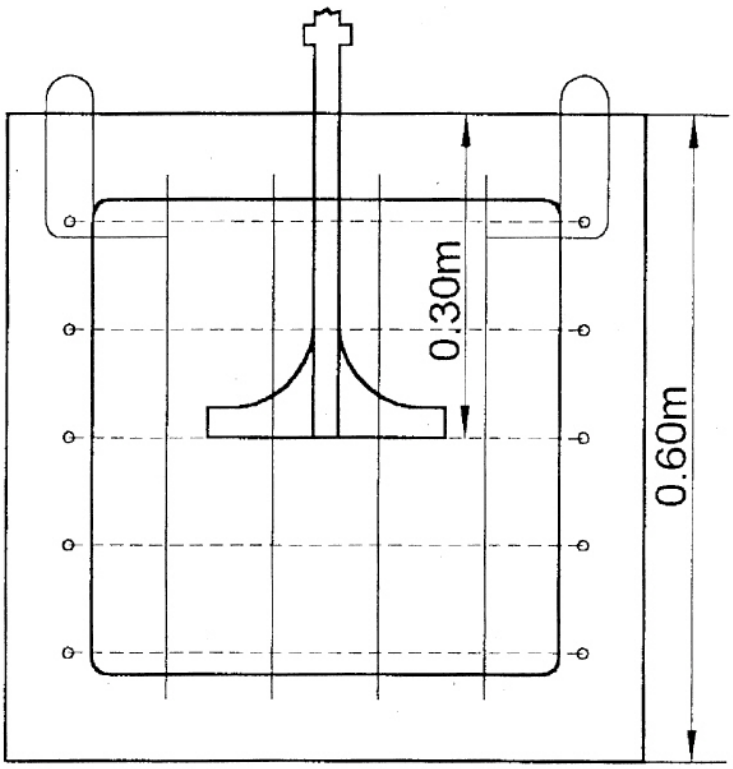

Figure 10.3

Testing device

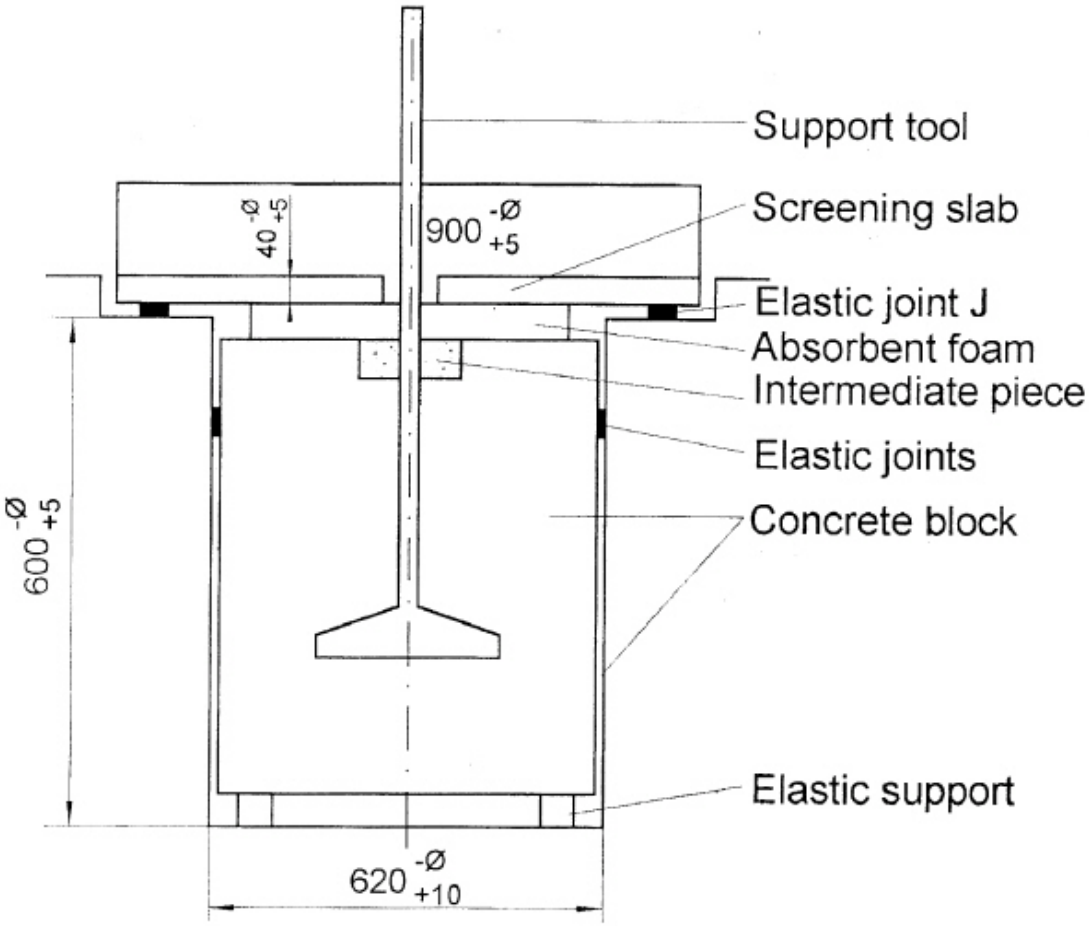

The value of A should be such that the screening slab resting on the elastic joint J is flush with the ground.

Concrete or mortar mixers

11.

Basic noise emission standard

EN ISO 3744:1995

Operating conditions during test

Test under load

The mixing device (drum) shall be filled to its rated capacity with sand of granulation 0 to 3 mm, the humidity shall be 4–10%.

The mixing device shall be operated at least at the rated speed.

Period of observation

The period of observation shall be at least 15 seconds.

Construction winches

12. See No. 0

The geometrical centre of the engine shall be positioned above the centre of the hemisphere; the winch shall be connected but no load shall be applied.

Conveying and spraying machines for concrete and mortar

13.

Basic noise emission standard

EN ISO 3744:1995

Operating conditions during test

If the machine is equipped with a boom, this is set upright and the pipe shall be led back to the filler funnel. If this is not the case the machine shall be equipped with a horizontal pipe of at least 30 m leading back to the filler funnel.

Test under load

(i) For machines conveying and spraying concrete:

The conveying system and the pipe shall be filled with a medium similar to concrete, the cement being replaced by an admixture e.g. finest ash. The machine shall operate at its maximum output, the period of one working cycle being not more than five seconds (if this period is exceeded, water shall be added to the “concrete" in order to reach this value).

(ii) For machines conveying and spraying mortar:

The conveying system and the pipe shall be filled with a medium similar to finishing mortar, the cement being replaced by an admixture, e.g. methyl cellulose. The machine shall operate at its maximum output, the period of one working cycle being not more than five seconds (if this period is exceeded, water shall be added to the “mortar" in order to reach this value).

Period of observation

The period of observation shall at least be 15 seconds.

Conveyor Belts

14. See No. 0

The geometrical centre of the engine shall be positioned above the centre of the hemisphere; the belt shall move without load and leave the hemisphere, if necessary, in the direction of point 1.

Cooling equipment on vehicles

15.

Basic noise emission standard

EN ISO 3744:1995

Operating conditions during test

Test under load

The cooling equipment shall be installed in a real or simulated cargo space and be tested in a stationary position where the height of the cooling equipment shall be representative of the intended installation requirements according to the instructions supplied to the purchaser. The power source of the cooling equipment shall operate at the rate that causes the maximum speed of the cooling compressor and the fan specified in the instructions. If the cooling equipment is intended to be powered by the driving engine of the vehicle the engine shall not be used during the test and the cooling equipment shall be connected to a suitable electrical power source. Removable tractor units shall be removed during the test.

Cooling equipment installed in cargo-space refrigeration units which have a choice of different power sources shall be tested separately for each power source. The test result reported shall as a minimum reflect the mode of operation which leads to the maximum noise output.

Period of observation

The period of observation shall be at least 15 seconds.

Dozers

16.

Basic noise emission standard

EN ISO 3744:1995

Test area

ISO 6395:1988

Measurement surface/number of microphone positions/measuring distance

ISO 6395:1988

Operating conditions during test

Mounting of equipment

Crawler dozers shall be tested on the test site corresponding to point 6.3.3 of ISO 6395:1988

Test under load

ISO 6395:1988, Annex B

Period(s) of observation and consideration of different operating conditions, if any

ISO 6395:1988, Annex B

Drill rigs

17.

Basic noise emission standard

EN ISO 3744:1995

Operating conditions during test

Test under load

EN 791:1995, Annex A

Period of observation

The period of observation shall at least be 15 seconds.

Dumpers

18.

Basic noise emission standard

EN ISO 3744:1995

Test area

ISO 6395:1988

Measurement surface/number of microphone positions/measuring distance

ISO 6395:1988

Operating conditions during test

Test under load

Equivalent ISO 6395:1988, Annex C, with the following amendment:

C4.3, second paragraph is replaced by:

"The engine shall be operated at its maximum governed speed (high idle). The transmission control shall be set to neutral. Bring the bucket to the tipped position (emptying) up to about 75% of its maximum movement and return it to its travelling position three times. This sequence of events is considered to be a single cycle for the stationary hydraulic mode.

If no engine power is used to tip the bucket, the engine shall be operated at idling speed with the transmission in neutral. The measurement shall be performed without tipping the bucket, the period of observation shall be 15 seconds."

Period(s) of observation/determination of resulting sound power level if more than one operating condition is used

ISO 6395:1988, Annex C

Equipment for loading and unloading tanks or silos on trucks

19.

Basic noise emission standard

EN ISO 3744:1995

Operating conditions during test

Test under load

The equipment shall be tested with the truck in a stationary position. The engine driving the equipment shall operate at the speed that causes the maximum output of the equipment specified in the instructions supplied to the purchaser.

Period of observation

The period of observation shall at least be 15 seconds.

Excavators

20.

Basic noise emission standard

EN ISO 3744:1995

Test area

ISO 6395:1988

Measurement surface/number of microphone positions/measuring distance

ISO 6395:1988

Operating conditions during test

Test under load

ISO 6395:1988, Annex A

Period(s) of observation/determination of resulting sound power level if more than one operating condition is used

ISO 6395:1988, Annex A

Excavator-loaders

21.

Basic noise emission standard

EN ISO 3744:1995

Test area

ISO 6395:1988

Measurement surface/number of microphone positions/measuring distance

ISO 6395:1988

Operating conditions during test

Test under load

ISO 6395:1988, Annex D

Period(s) of observation/determination of resulting sound power level if more than one operating condition is used

ISO 6395:1988, Annex D

Glass recycling containers

22.

Basic noise emission standard

EN ISO 3744:1995

For the purpose of this noise test code the single-event sound pressure level L_{pls} as defined in EN ISO 3744:1995 point 3.2.2 is used in measuring the sound pressure level at the microphone positions.

Environmental correction K_{2A}

Measurement in the open air

$K_{2A} = 0$

Measurements indoors

The value of the constant K_{2A}, determined in accordance with Annex A of EN ISO 3744:1995, shall be ≤2.0 dB in which case K_{2A} shall be disregarded.

Operating conditions during test

The noise measurement shall be carried out during a complete cycle beginning with the empty container and completed when 120 bottles have been thrown into the container.

The glass bottles are defined as follows:

— capacity: 75cl

— mass: 370±30 g.

The testing operator holds each bottle by its neck and with its bottom towards the filling aperture and then he pushes it gently inside through the filling aperture in the direction of the centre of the container, avoiding if possible the bottle hitting against the walls. Only one filling aperture is used for throwing the bottles and it is the one nearest to microphone position 12.

Period(s) of observation/determination of resulting sound power if more than one operating condition is used

The A-weighted single-event sound pressure level is preferably simultaneously measured at the six microphone positions for each bottle thrown into the container.

The A-weighted single-event sound power level averaged over the measurement surface is calculated according to EN ISO 3744:1995, point 8.1.

The A-weighted single-event sound pressure level averaged over all 120 throwings of bottles is calculated as the logarithmic mean of the A-weighted single-event sound pressure levels averaged over the measurement surface.

Graders

23.

Basic noise emission standard

EN ISO 3744:1995

Test area

ISO 6395:1988

Measurement surface/number of microphone positions/measuring distance

ISO 6395:1988

Operating conditions during test

Test under load

Corresponding to ISO 6395:1988, Annex B

Period(s) of observation/determination of resulting sound power level if more than one operating condition is used

ISO 6395:1988, Annex B

Grass trimmers/grass edge trimmers

24. See No. 2

The trimmer shall be positioned by a suitable device in such a way that its cutting device is above the centre of the hemisphere. For grass trimmers, the centre of the cutting device shall be held at a distance of about 50 mm above the surface. In order to accommodate the cutting blades, grass edge trimmers should be positioned as close as possible to the test surface.

Hedge trimmers

25.

Basic noise emission standard

EN ISO 3744:1995

Test area

ISO 11094:1991

in case of dispute, measurements shall be carried out in the open air on the artificial surface (point 4.1.2 to ISO 11094:1991)

Environmental correction K_{2A}

Measurement in the open air

$K_{2A} = 0$

Measurements indoors

The value of the constant K_{2A}, determined without the artificial surface and in accordance with Annex A of EN ISO 3744:1995, shall be ≤ 2.0 dB, in which case K_{2A} shall be disregarded.

Measurement surface/number of microphone positions/measuring distance

ISO 11094:1991

Operating conditions during test

Mounting of equipment

The hedge trimmer shall be held in the natural manner for normal use either by a person or by a suitable device in such a way that its cutting device is above the centre of the hemisphere.

Test under load

The hedge clipper shall be operated at its nominal speed with the cutting device working.

Period of observation

The period of observation shall at least be 15 seconds.

High pressure flushers

26.

Basic noise emission standard

EN ISO 3744:1995

Operating conditions during test

Test under load

The high pressure flusher shall be tested in a stationary position. The engine and auxiliary units operate at the speed provided by the manufacturer for the operation of the working equipment; the high pressure pump(s) is (are) operating at its (their) maximum speed and operating pressure provided by the manufacturer. Using an adapted nozzle the pressure reduction valve shall be just on the point of reacting. The flow noise of the nozzle shall not have any influence on the results of the measurements.

Period of observation

The period of observation shall at least be 30 seconds.

High pressure water jet machines

27.

Basic noise emission standard

EN ISO 3744:1995

Measurement surface/number of microphone positions/measuring distance

Parallelepiped/according to EN ISO 3744:1995 with measurement distance$d$ = 1m

Operating conditions during test

Mounting of equipment

The high pressure water jet machine shall be installed on the reflecting plane; skid-mounted machines shall be placed on a support 0.40m high, unless otherwise required by the manufacturer's conditions of installation.

Test under load

The high-pressure cleaning machine shall be brought to its steady-state within the range specified by the manufacturer. During testing the nozzle shall be coupled to the high-pressure cleaning machine that causes the highest pressure if used according to the manufacturer's instructions.

Period of observation

The period of observation shall at least be 15 seconds.

Hydraulic hammers

28.

Basic noise emission standard

EN ISO 3744:1995

Measurement surface/number of microphone positions/measuring distance

Hemisphere/six microphone positions according to Part A, item 5/*r*=10 m

Operating conditions during tests

Mounting of the equipment

For the test the hammer is attached to a carrier and a special test block structure shall be used. Figure 28.1 gives the characteristics of this structure and Figure 28.2 shows the position of the carrier.

Carrier

The carrier for the test hammer shall meet the requirements of the test hammer's technical specifications especially in weight range, hydraulic output power, supply oil flow and return line back pressure.

Mounting

Mechanical mounting as well as connections (hoses, pipes ...) must correspond to specifications given in the hammer's technical data. All significant noise caused by pipes and various mechanical components needed for installation, ought to be eliminated. All component connections have to be well tightened.

Hammer stability and static hold force

The hammer shall be firmly held down by the carrier in order to give the same stability as that existing under normal operating conditions. The hammer must be operated in an upright position.

Tool

A blunt tool shall be used in the measurements. The length of the tool must meet the requirements given in Figure 28.1 (test block).

Test under load

Hydraulic input and power and oil flow

Operating conditions of the hydraulic hammer shall be appropriately adjusted, measured and reported along with the corresponding technical specification value. The hammer under test must be used in such a way that 90% or more of the maximum hydraulic input power and oil flow of the hammer can be reached.

Care shall be taken that the total uncertainty of the measurement chains ofp_s and$Q$ is kept within +5%. This assures the hydraulic input power determination within+10% accuracy. Assuming linear correlation between hydraulic input power and emitted sound power this would mean variation of less than+0.4 dB in the determination of the sound power level.

Adjustable components having effect on the hammer power

Pre-settings of all accumulators, pressure central valves and other possible adjustable components must meet the values given in technical data. If more than one fixed impact rate is optional, measurements have to be made using all settings. Minimum and maximum values are presented.

Quantities to be measured

p_s The mean value of the hydraulic supply fine pressure during the hammer's operation including at least 10 blows.

Q The mean value of the breaker inlet oil flow measured simultaneously withp_s.

T The oil temperature must lie between + 40/+ 60° C during measurements. The temperature of the hydraulic breaker body must have been stabilised to normal operating temperature before starting the measurements.

P_a The prefill gas pressure of all accumulators must be measured in static situation (breaker not operating) at stable ambient temperature of + 15/+ 25° C. The measured ambient temperature shall be recorded with the measured accumulator prefill gas pressure.

Parameters to be evaluated from the measured operating parameters:

P_{IN} **Hydraulic input power of the breaker** $P_{IN} = p_s . Q$

Hydraulic supply line pressure measurement, ps

—p_s must be measured as close to the breaker IN-port as possible.

—p_s shall be measured with a pressure gauge (minimum diameter: 100 mm; accuracy class ±1.0% FSO).

Breaker inlet oil flow, Q

—*Q* must be measured from the supply pressure line as close to the breaker IN-port as possible.

—*Q* must be measured with an electric flowmeter (accuracy class±2.5% of the flow reading).

Measuring point of the oil temperature, T

—*T* must be measured from the oil tank of the carrier or from the hydraulic line connected to the hammer. Measuring point shall be specified in the report.

— accuracy of the temperature reading must lie within±2° C of the actual value.

Period of observation/determination of resulting sound power level

The period of observation shall be at least 15 seconds.

The measurements are repeated three times, or more if necessary. The final result is calculated as the arithmetic mean of the two highest values that do not differ by more than 1 dB.

Figure 28.1

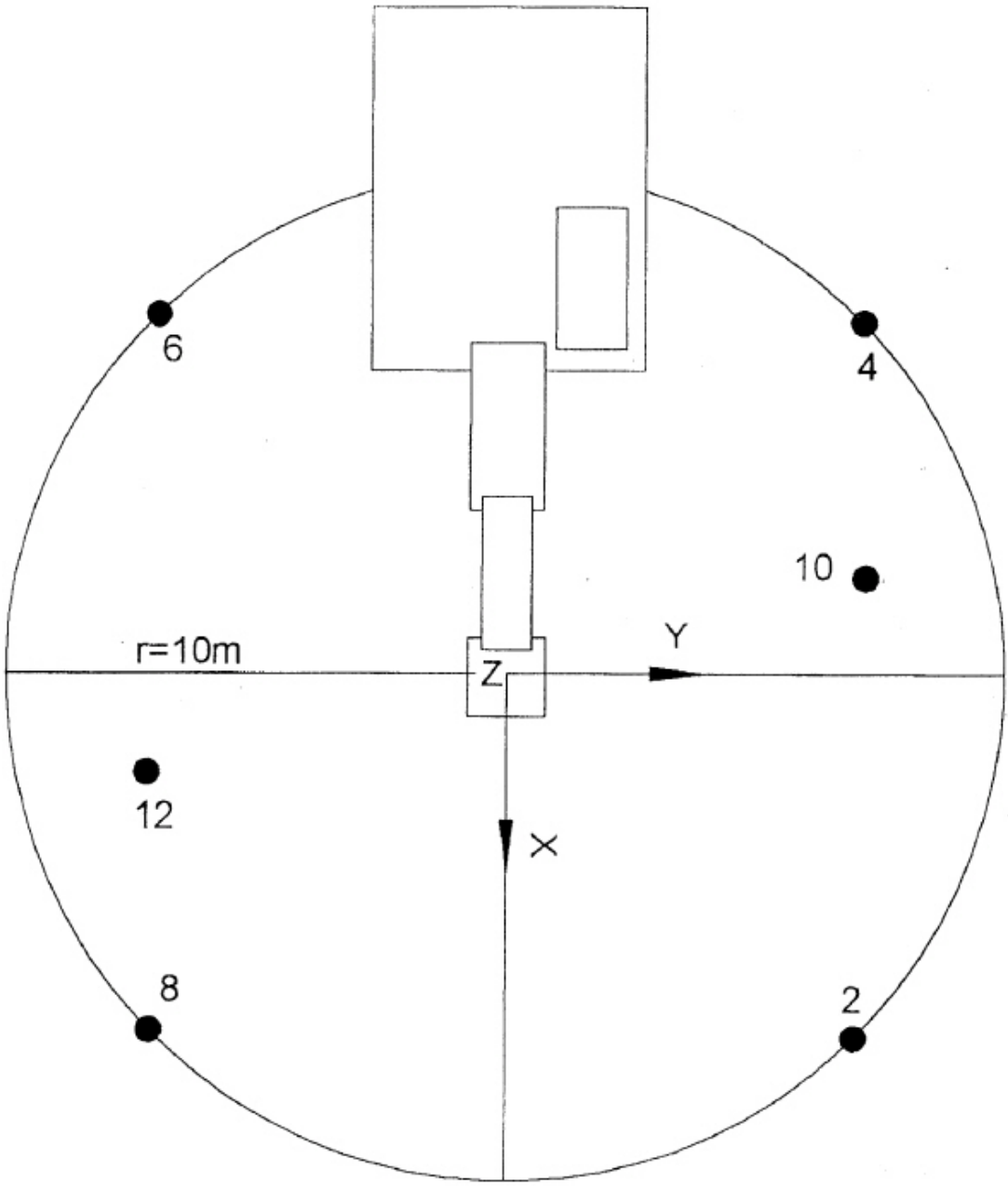

Figure 28.2

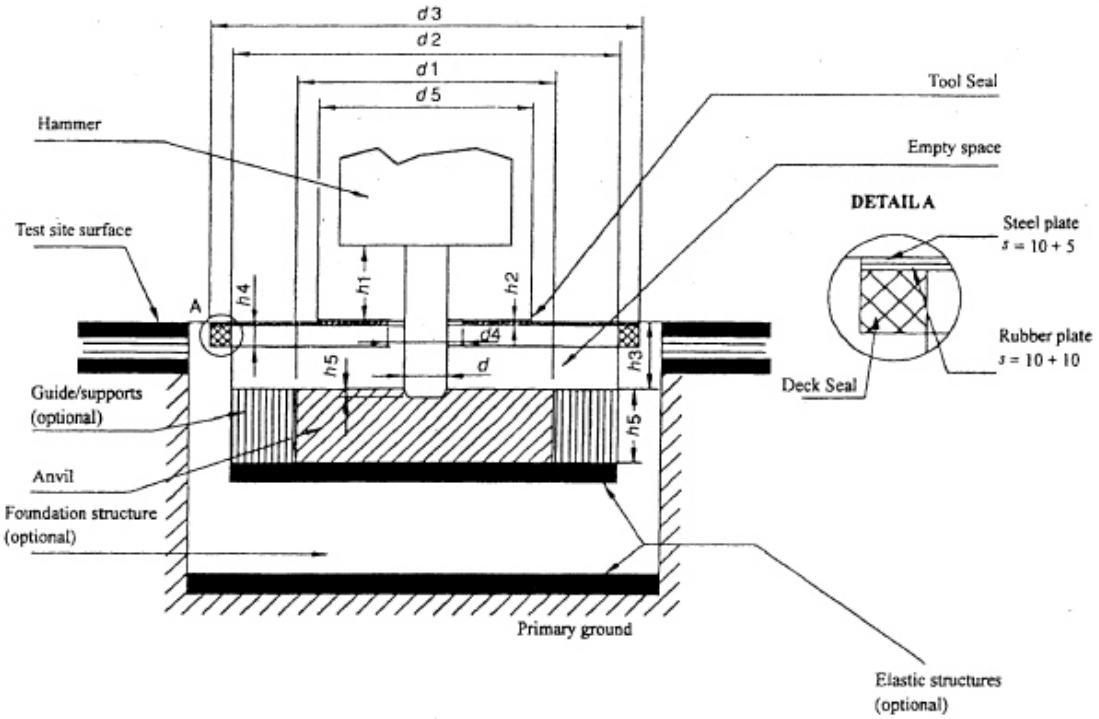

Definitions

d Tool diameter (mm)

d_1 Anvil diameter, 1200±100 mm

d_2 Inner diameter of the anvil support structure, ≤ 1800 mm

d_3 Diameter of the test block deck, ≤ 2200 mm

d_4 Diameter of the tool opening in the deck, ≤350 mm

d_5 Diameter of the tool seal, ≤1000 mm

h^1 Visible tool length between the lowest part of the housing and tool seal upper surface, (mm)$h_1 = d \pm d/2$

h_2 Tool seal thickness above the deck, ≤20 mm (if the tool seal is located below the deck, its thickness is not limited; it may be made of foam rubber)

h_3 Distance between deck upper surface and anvil upper surface, 250±50 mm

h_4 Isolating foam rubber deck seal thickness, ≤30 mm

h_5 Anvil thickness, 350 ±50 mm

h_6 Tool penetration, ≤50 mm

If the quadratic shape of the test block structure is used, the maximum length dimension equals 0.89× corresponding diameter.

The empty space between the deck and the anvil can be filled with elastic foam rubber or other absorption material, density <220 kg/m^3.

Hydraulic power packs

29.

Basic noise emission standard

EN ISO 3744:1995

Operating conditions during test

Mounting of equipment

The hydraulic power pack shall be installed on the reflecting plane; skid-mounted hydraulic power packs shall be placed on a support 0.40 m high, unless otherwise required by the manufacturer's conditions of installation.

Test under load

During testing, no tools shall be coupled to the hydraulic power pack.

The hydraulic power pack shall be brought to its steady-state within the range specified by the manufacturer. It shall operate at its nominal speed and its nominal pressure. The nominal speed and pressure are those appearing in the instructions supplied to the purchaser.

Period of observation

The period of observation shall at least be 15 seconds.

Joint cutters

30.

Basic noise emission standard

EN ISO 3744:1995

Operating conditions during test

Test under load

The joint cutter shall be equipped with the largest possible blade foreseen by the manufacturer in the instructions supplied to the purchaser. The engine shall operate at its maximum speed with the blade idling.

Period of observation

The period of observation shall be at least 15 seconds.

Landfill compactors

31. See No. 37

Lawnmowers

32.

Basic noise emission standard

EN ISO 3744:1995

Test area

ISO 11094:1991

In case of dispute, measurements shall be carried out in the open air on the artificial surface (point 4.1.2 of ISO 11094:1991).

Environmental correction K_{2A}

Measurement in the open air

$K_{2A} = 0$

Measurements indoors

The value of the constant K_{2A}, determined without the artificial surface and in accordance with Annex A to EN ISO 3744:1995 shall be≤ 2.0 dB, in which case K_{2A} shall be disregarded.

Measurement surface/number of microphone positions/measuring distance

ISO 11094:1991

Operating conditions during test

Mounting of equipment

If the wheels of the lawnmower could cause a compression of the artificial surface of more than 1 cm, the wheels shall be placed on supports so that they are level with the artificial surface before compression. If the cutting device cannot be separated from the driving wheels of the lawnmower, the mower shall be tested on supports with the cutting device operating at its maximum speed laid down by the manufacturer. The supports shall be made in such a way that they do not influence the measurement results.

Test free of load

ISO 11094:1991

Period of observation

ISO 11094:1991

Lawn trimmers/lawn edge trimmers

33. See No. 32

The trimmer shall be positioned by a suitable device in such a way that its cutting device is above the centre of the hemisphere. For lawn trimmers, the centre of the cutting device shall be held at a distance of about 50 mm above the surface. In order to accommodate the cutting blades, lawn edge trimmers should be positioned as close as possible to the test surface.

Leaf blowers

34.

Basic noise emission standard

EN ISO 3744:1995

Test area

ISO 11094:1991

In case of dispute, measurements shall be carried out in the open air on the artificial surface (point 4.1.2 of ISO 11094:1991).

Environmental correction K_{2A}

Measurement in the open air

$K_{2A} = 0$

Measurements indoors

The value of the constant K_{2A}, determined without artificial surface and in accordance with Annex A to EN ISO 3744:1995, shall be≤ 2.0 dB in which case K_{2A} shall be disregarded.

Measurement surface/number of microphone positions/measuring distance

ISO 11094:1991

Operating conditions during test

Mounting of equipment

The leaf blower shall be positioned in the natural manner for normal use in such a way that the outlet of its blowing device is situated (50±25) mm above the centre of the hemisphere; if the leaf blower is hand-held it shall be held either by a person or by a suitable device.

Test under load

The leaf blower shall be operated at its nominal speed and the nominal air flow stated by the manufacturer.

Period of observation

The period of observation shall at least be 15 seconds.

Note: If a leaf blower can be also used as a leaf collector it shall be tested in both configurations, in which case the higher value shall be used.

Leaf collectors

35.

Basic noise emission standard

EN ISO 3744:1995

Test area

ISO 11094:1991

In case of dispute, measurements shall be carried out in the open air on the artificial surface (point 4.1.2 of ISO 11094:1991).

Environmental correction K_{2A}

Measurement in the open air

$K_{2A} = 0$

Measurements indoors

The value of the constant K_{2A}, determined without artificial surface and in accordance with Annex A to EN ISO 3744:1995, shall be ≤2.0 dB in which case K_{2A} shall be disregarded.

Measurement surface/number of microphone positions/measuring distance

ISO 11094:1991

Operating conditions during test

Mounting of equipment

The leaf collector shall be positioned in the natural manner for normal use in such a way that the inlet of the collecting device is situated (50±25mm) above the centre of the hemisphere; if the leaf collector is hand-held it shall be held either by a person or by a suitable device.

Test under load

The leaf collector shall be operated at its nominal speed with the nominal air flow in the collecting device stated by the manufacturer.

Period of observation

The period of observation shall be at least 15 seconds.

Note: If a leaf collector can be also used as a leaf blower it shall be tested in both configurations, in which case the higher value shall be used.

Lift trucks

36.

Basic noise emission standard

EN ISO 3744:1995

Operating conditions during test

Safety requirements and the manufacturer's information shall be observed.

Lifting condition

With the truck stationary the load (non-sound absorbent material, eg steel or concrete; at least 70% of the actual capacity stated in the manufacturer's instruction) shall be lifted, from the lowered position, at maximum speed to the standardised lift height applicable to that type of industrial truck in accordance with the relevant European Standard in the series "Safety of Industrial Trucks". If the actual maximum lift height is less, it may be used in individual measurements. The lift height shall be listed in the test report.

Drive condition

Drive the truck, without load, at full acceleration from standstill over a distance of three times its length to reach line A-A (line connecting microphone positions 4 and 6), continue driving the truck at maximum acceleration to line B-B (line connecting microphone positions 2 and 8). When the rear of the truck has crossed line B-B, the accelerator may be released.

If the truck has a multi-gear transmission, select the gear that ensures the highest possible speed over the measurement distance.

Period(s) of observation/determination of resulting sound power level if more than one operating condition is used

The periods of observation are:

— for lifting condition: the whole lift cycle;

— for drive condition: the time period starting when the truck's centre crosses the line A-A and ends when its centre reaches the line B-B.

The resulting sound power level for all types of lift trucks, however, is calculated by

$$L_{WA} = 10 \log (0.7 \times 10^{0.1 L_{WAc}} + 0.3 \times 10^{0.1 L_{WAa}})$$

where subscript "a" indicates "lifting mode" and subscript "c" indicates "driving mode".

Loaders

37.

Basic noise emission standard

EN ISO 3744:1995

Test area

ISO 6395:1988

Measurement surface/number of microphone positions/measuring distance

ISO 6395:1988

Operating conditions during test

Mounting of equipment

Crawler loaders shall be tested on the test site corresponding to point 6.3.3 of ISO 6395:1988

Test under load

ISO 6395:1988, Annex C

Period(s) of observation/determination of resulting sound power level if more than one operating condition is used

ISO 6395:1988, Annex C

Mobile Cranes

38.

Basic noise emission standard

EN ISO 3744:1995

Operating conditions during test

Mounting of equipment

If the crane is equipped with outriggers, they shall be fully extended and the crane shall be levelled on its pads in mid position of possible support height.

Test under load

The mobile crane to be tested shall be presented in its standard version as described by the manufacturer. The engine power considered for determination noise limit is the nominal power of the engine used for crane motion. The crane shall be equipped with its maximum permitted counterweight mounted on the slewing structure.

Before carrying out any measurement, the engine and the hydraulic system of the mobile crane shall be brought to their normal working temperature following the instruction of the manufacturer and all relevant safety-related procedures given in the instruction handbook shall be carried out.

If the mobile crane is equipped with several engines, the engine used for the crane's function shall be run. The carrier engine shall be turned off.

If the engine of the mobile crane is fitted with a ventilator, it shall run during the test. If the ventilator can be operated at several speeds, the test shall be carried out with the ventilator running at the highest speed.

The mobile crane shall be measured under the following three ((a) to (c)) or four ((a) to (d)) conditions:

For all working conditions the following shall apply:

— Engine speed at 3/4 of maximum speed specified for crane operation mode with a tolerance of±2%.

— Acceleration and deceleration at the maximum value without dangerous movements of the load or the hook block.

— Motions at maximum possible speed as given in the instruction manual under the conditions given.

(a) Hoisting

The mobile crane shall be loaded with a load which creates 50% of the maximum rope force. The test consists of hoisting of the load and the immediately following lowering to the starting position. The length of the boom shall be chosen so that the full test lasts 15 to 20 seconds.

(b) Slewing

With the boom adjusted to an angle of 40° to 50° to the horizontal and without load the upper carriage shall be slewed 90° to the left immediately followed by slewing back to the starting position. The jib shall be at its minimum length. The observation period shall be the time needed to carry out the working cycle.

(c) Derricking

The test starts with raising the short jib from the lowest working position immediately followed by the lowering of the jib to its original position. The movement shall be executed without load. The duration of the test shall be at least 20 seconds.

(d) Telescoping (if applicable)

With the jib adjusted to an angle of 40° to 50° to the horizontal without load and the jib fully retracted, the telescoping cylinder for the first section only shall be extended together with the first section to its full length and immediately retracted together with the first section.

Period(s) of observation/determination of resulting sound power level if more than one operating condition is used

The resulting sound power level is calculated by:

(i) if telescoping is applicable

$$L_{WA} = 10 \log (0.4 \times 10^{0.1L_{WAa}} + 0.25 \times 10^{0.1L_{WAb}} + 0.25 \times 10^{0.1L_{WAc}} + 0.1 \times 10^{0.1L_{WAd}})$$

(ii) if telescoping is not applicable

$$L_{WA} = 10 \log (0.4 \times 10^{0.1L_{WAa}} + 0.3 \times 10^{0.1L_{WAb}} + 0.3 \times 10^{0.1L_{WAc}})$$

where

L_{WAa} is the sound power level for the hoisting cycle

L_{WAb} is the sound power level for the slewing cycle

L_{WAc} is the sound power level for the derricking cycle

L_{WAd} is the sound power level for the telescoping cycle (if applicable)

Mobile waste containers

39.

Basic noise emission standard

EN ISO 3744:1995

Test area

— Reflecting surface of concrete or non-porous asphalt

— Laboratory room which provides a free field over a reflecting plane

Environmental correction K_{2A}

Measurement in the open air

$K_{2A} = 0$

Measurement indoors

The value of the constant K_{2A}, determined in accordance with Annex A to EN ISO 3744:1995, shall be ≤2.0 dB, in which case K_{2A} shall be disregarded.

Measurement surface/number of microphone positions/measuring distance

Hemisphere/six microphone positions according to Part A item five/*r* = 3 m

Operating conditions during test

All the measurements shall be carried out with an empty container.

Test No. 1: Free shutting down of the lid along the container body

To minimise his influence on the measurements, the operator shall stand at the back side of the container (hinge side). The lid shall be released by its middle, to prevent warping during its fall.

The measurement is carried out during the following cycle, repeated 20 times:

— initially, the lid is raised vertically

— the lid is released forward, if possible without giving an impulse, with the operator at the back of the container, unmoving until the lid is shut

— after complete shutting, the lid is raised to its initial position.

Note: If necessary the operator can move temporarily to raise the lid.

Test No. 2 Complete opening of the lid

To minimise his influence on the measurements, the operator shall stand at the back side of the container (hinge side) for the four-wheel containers, or on the right side of the container (between microphone position 10 and microphone position 12) for the two-wheel containers. The lid shall be released by its middle or as near as possible to its middle.

To prevent any moving of the container, wheels shall be locked during the test. For the two-wheel containers, and to prevent any bounce of the container, the operator can maintain it by placing his hand on the top rim.

The measurement is carried out during the following cycle:

— initially, the lid is opened horizontally

— the lid is released without giving an impulse

— after complete opening, and before a possible rebound, the lid is raised to its initial position.

Test No. 3: Rolling of the container over an artificial irregular track

For this test, an artificial test track, simulating an irregular ground is used. This test track consists of two parallel strips of steel mesh (6 m long and 400 mm wide), fastened in the reflecting plane approximately every 20 cm. The distance between the two strips is adapted according to the type of container, in order to allow the wheels to roll all over the whole length of the track. The mounting conditions shall ensure a flat surface. If necessary, the track is fastened on the ground with resilient material to avoid emission of parasitic noise.

Note: Every strip can be composed of several 400 mm wide elements fitted together.

An example of adequate track is given in Figures 39.1 and 39.2

The operator is situated at the lid hinge side.

The measurement is carried out while the operator draws the container along the artificial track, with a constant speed of approximately 1 m/s, between point A and B (4.24 m distance—see Figure 39.3) when the wheel axle, for a 2-wheel container, or the first wheel axle for a 4-wheel container, reaches point A and B. This procedure is repeated three times in each direction.

During the test, for a 2-wheel container, the angle between the container and the track shall be 45°. For a 4-wheel container, the operator shall ensure an appropriate contact of all the wheels with the track.

Period(s) of observation/determination of resulting sound power level if more than one operating condition is used

Test Nos 1 and 2: Free shutting down of the lid along the container body and complete opening of the lid

If possible, the measurements are carried out simultaneously at the six microphone positions. Otherwise, the sound levels measured at each microphone position will be classified in increasing order and the sound power levels are calculated by associating the values at each microphone position according to their row.

The A-weighted single-event sound pressure level is measured for each of the 20 shuttings and the 20 openings of the lid at each measurement point. The sound power levels $L_{WAshutting}$ and $L_{WAopening}$ are calculated from the quadratic mean of the five highest values among those obtained.

Test No. 3: Rolling the container over an artificial irregular track

The period of observation T shall be equal to the duration necessary to cover the distance between point A and B on the track.

The sound power level $L_{WArolling}$ is equal to the mean of six values differing by less than 2 dB. If this criterion is not fulfilled with six measurements, the cycle is repeated as far as necessary.

The resulting sound power level is calculated by:

$$L_{WA} = 10 \log \tfrac{1}{3} \left(10^{0.1 L_{WAshutting}} + 10^{0.1 L_{WAopening}} + 10^{0.1 L_{WArolling}}\right)$$

Figure 39.1

Drawing of the rolling track

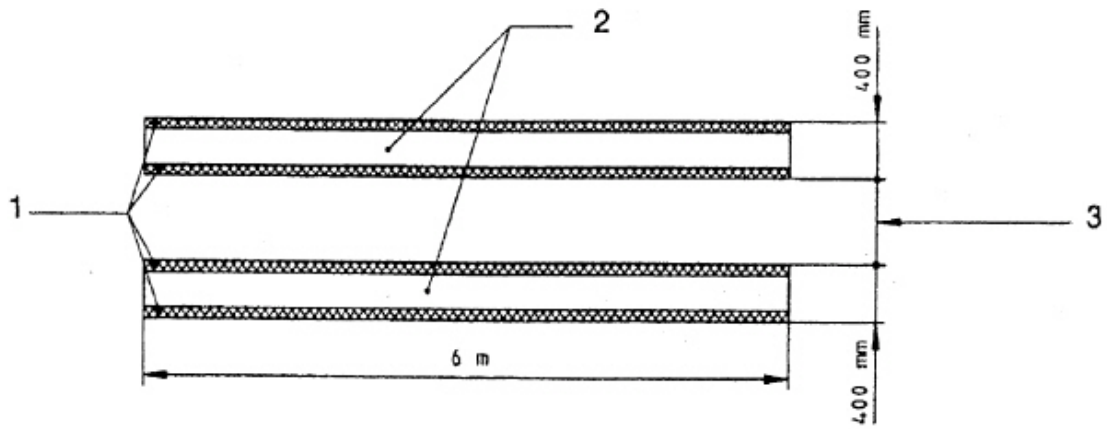

1 Wooden wire mesh cleat
2 Rolling parts
3 Adapted to the container

Figure 39.2

Detail of construction and mounting of the rolling track

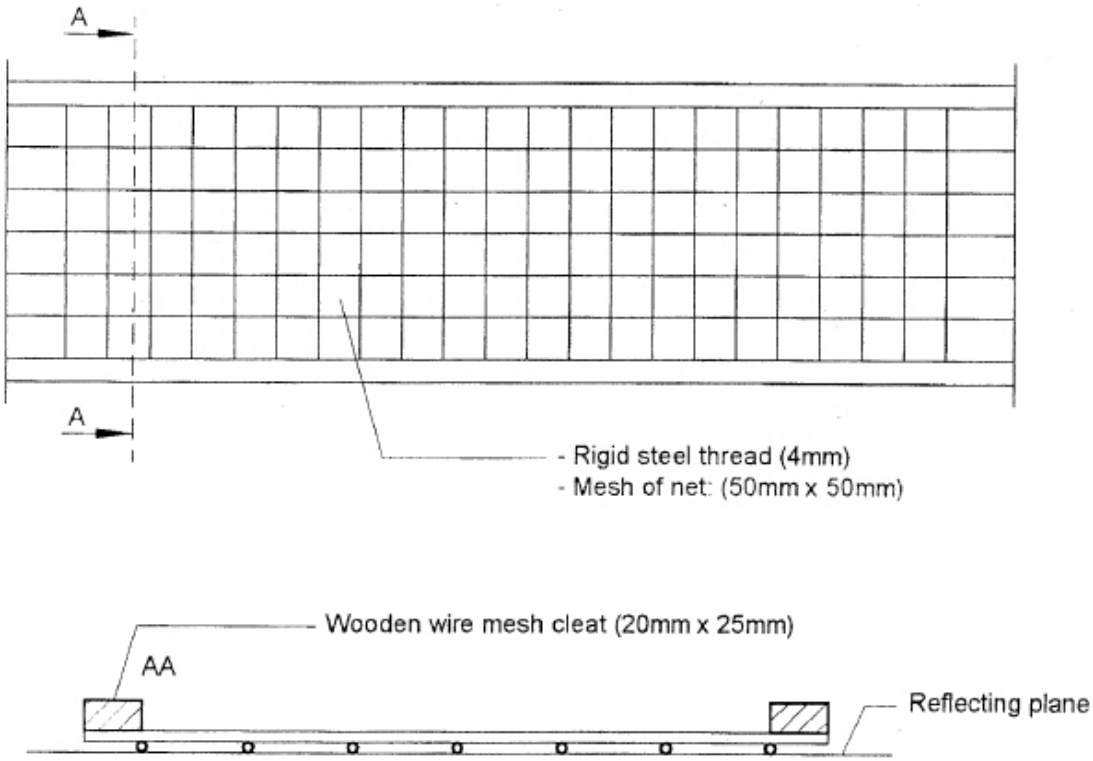

Figure 39.3

Measurement distance

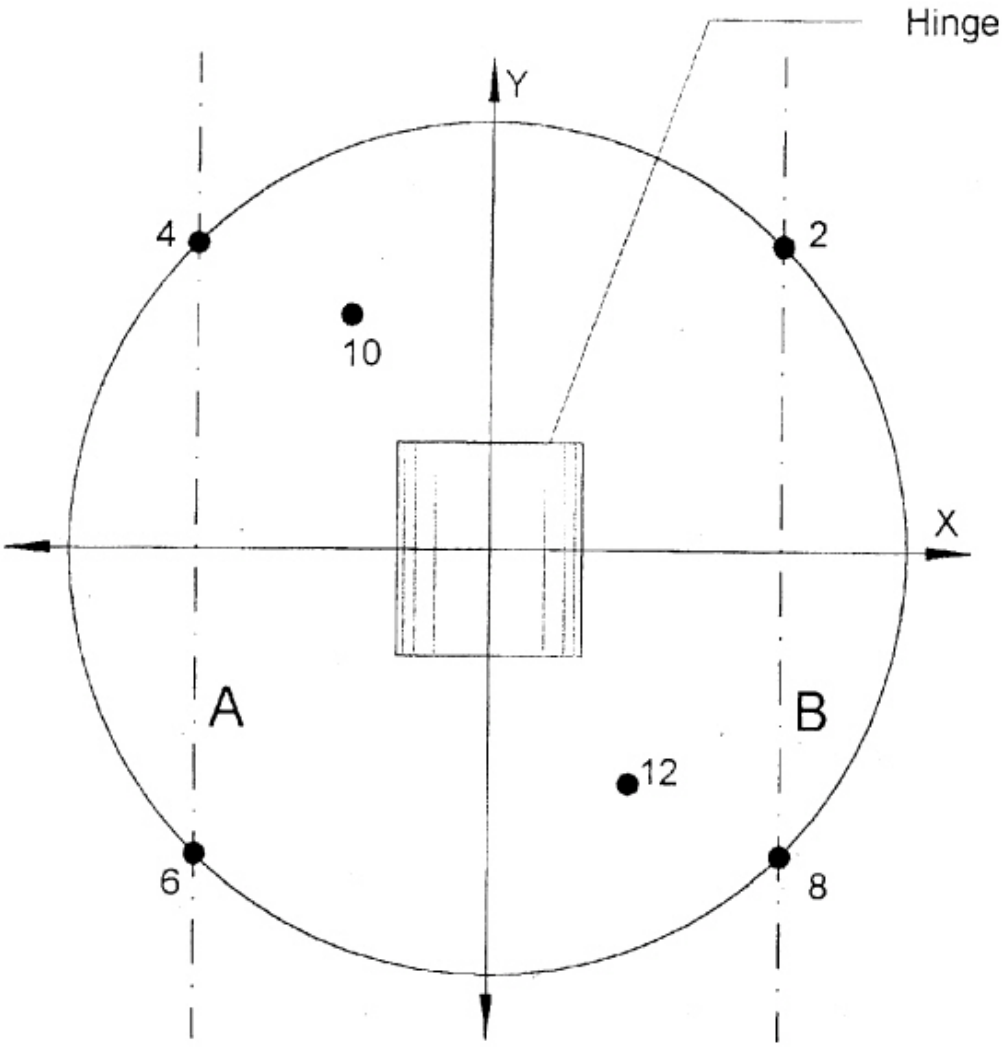

Motor hoes

40. See No. 32

The tool shall be disconnected during measurement.

Paver-finishers

41.

Basic noise emission standard

EN ISO 3744:1995

Operating conditions during test

Test under load

The engine of the machine shall operate at the nominal speed indicated by the manufacturer. All working units shall be activated and operate at the following speeds:

conveying system	at least 10% of maximum value
spreading system	at least 40% of maximum value
tamper (speed, stroke)	at least 50% of maximum value
vibrators (speed, unbalance moment)	at least 50% of maximum value
pressure bars (frequency, pressure)	at least 50 per cent of maximum value

Period of observation

The period of observation shall at least be 15 seconds.

Piling equipment

42.

Basic noise emission standard

EN ISO 3744:1995

Test area

ISO 6395:1988

Operating conditions during test

Test under load

The piling equipment is installed at the top of a pile which has sufficient resistance in the ground to allow the equipment to work at a steady speed. In the case of impact hammers, the cap must be supplied with a new, wooden filling. The head of the pile is 0.50 m above the test area.

Period of observation

The period of observation shall at least be 15 seconds.

Pipelayers

43. See No. 0

Piste caterpillars

44. See No. 0

Power generators

45.

Basic noise emission standard

EN ISO 3744:1995

Environmental correction K_{2A}

Measurement in the open air

$K_{2A} = 0$

Measurement indoors

The value of the constant K_{2A}, determined without artificial surface and in accordance with Annex A to EN ISO 3744:1995, shall be ≤2.0 dB, in which case K_{2A} shall be disregarded.

Measurement surface/number of microphone positions/measuring distance

Hemisphere/six microphone positions according to Part A item 5/according to Part A item 5. If l >2m: a parallelepiped according to EN ISO 3744:1995 may be used with measuring distance*d* = 1m.

Operating conditions during test

Mounting of equipment

The power generators shall be installed on the reflecting plane; skid-mounted power generators shall be placed on a support 0.40m high, unless otherwise required by the manufacturer's conditions of installation.

Test under load

ISO 8528-10:1998, point 9

Period of observation

The period of observation shall at least be 15 seconds.

Power sweepers

46.

Basic noise emission standard

EN ISO 3744:1995

Operating conditions during test

Test under load

The power sweeper shall be tested in a stationary position. The engine and auxiliary units operate at the speed provided by the manufacturer for the operation of the working equipment; the broom operates at its highest speed, it is not in contact with the ground; the suction system shall work at its maximum suction power with the distance between ground and mouth of the suction system not exceeding 25 mm.

Period of observation

The period of observation shall at least be 15 seconds.

Refuse collection vehicles

47.

Basic noise emission standard

EN ISO 3744:1995

Operating conditions during test

Test under load

The refuse collection vehicle shall be tested in a stationary position for the following operating conditions:

1. The engine is running at maximum speed provided by the manufacturer. The equipment shall not be running. The test is not carried out for vehicles with electrical supply only.

2. The compaction system is running.

The refuse collection vehicle and the hopper receiving the waste are empty.

If the engine speed is automatically accelerated when the compaction system is running, this value shall be measured. If the measured value is lower than the speed provided by the manufacturer by

more than 5% the test is carried out with the engine accelerated by the cab accelerator, to ensure the engine speed provided by the manufacturer.

If the engine speed for the compaction system is not provided by the manufacturer or if the vehicle is not provided with an automatic accelerator, then the engine speed, issued by the cab accelerator, shall be 1200 rpm.

3. The lifting device is running up and down, without load and without container. The engine speed is obtained and controlled as for the compaction system running (point 2).

4. Material is falling into the refuse collection vehicle.

Materials are emptied in bulk with the lifting device into the hopper (initially empty). A two-wheeled container with a 240 l capacity, complying with EN 840-1:1997, shall be used for this operation. If the lifting device is not able to pick up such a container, a container with a capacity close to 240 l shall be used. The material shall consist of 30 tubes of PVC, each with a 0,4 kg approximate mass and with the following dimensions:

— length:	150 mm±0.5 mm
— nominal external diameter:	90 mm + 0.3/- 0 mm
— nominal depth:	6.7 mm + 0.9/- 0 mm

Period(s) of observation/determination of resulting sound power level if more than one operating condition is used

The period of observation shall be:

1. at least 15 seconds. The resulting sound power level shall be L_{WA1}.

2. at least three complete cycles, if the compaction system is running automatically. If the compaction system is not running automatically, but cycle by cycle, measurements are carried out at least during three cycles. The resulting sound power level (L_{WA2}) shall be the root mean square value of the three (or more) measurements.

3. at least three continuous complete work-cycles, including the entirety of lifting device up and lifting device down. The resulting sound power level (L_{WA3}) shall be the root mean square value of the three (or more) measurements.

4. at least three complete work-cycles, each including the falling of 30 tubes into the hopper. Each cycle shall not exceed five seconds. For these measurements, $L_{pAeq,T}$ is replaced by $L_{pA,ls}$. The resulting sound power level (L_{WA4}) shall be the root mean square value of the three (or more) measurements.

The resulting sound power level is calculated by:

$$L_{WA} = 10 \log (0.06 \times 10^{0.1 L_{WA1}} + 0.53 \times 10^{0.1 L_{WA2}} + 0.4 \times 10^{0.1 L_{WA3}} + 0.01 \times 10^{0.1 L_{WA4}})$$

Note: In the case of a refuse collection vehicle only electrically supplied, the coefficient associated to L_{WA1} is assumed to be equal to 0.

Road milling machines

48.

Basic noise emission standard

EN ISO 3744:1995

Operating conditions during test

Mounting of equipment

The longitudinal axis of the road milling machine shall be parallel to the y-axis.

Test under load

The road milling machine shall be brought to its steady state within the range specified in the instructions supplied to the purchaser. The engine and all attachments shall be running at their respective rated speeds in the idling mode.

Period of observation

The period of observation shall at least be 15 seconds.

Scarifiers

49.

Basic noise emission standard

EN ISO 3744:1995

Test area

ISO 11094:1991

In case of dispute, measurements shall be carried out in the open air on the artificial surface (point 4.1.2 of ISO 11094:1991).

Environmental correction K_{2A}

Measurement in the open air

$K_{2A} = 0$

Measurement indoors

The value of the constant K_{2A}, determined without artificial surface and in accordance with Annex A to EN ISO 3744:1995, shall be ≤2.0 dB, in which case K_{2A} shall be disregarded.

Measurement surface/number of microphone positions/measuring distance

ISO 11094:1991

Operating conditions during test

Test under load

The scarifier shall be operated with the engine at its nominal speed and its working device idling (operating, but not ripping).

Period of observation

The period of observation shall at least be 15 seconds.

Shredders/Chippers

50.

Basic noise emission standard

EN ISO 3744:1995

Test area

ISO 11094:1991

Environmental correction K_{2A}

Measurement in the open air

$K_{2A} = 0$

Measurements indoors

The value of the constant K_{2A}, determined without artificial surface and in accordance with Annex A to EN ISO 3744:1995, shall be ≤2.0 dB, in which case K_{2A} shall be disregarded.

Measurement surface/number of microphone positions/measuring distance

ISO 11094:1991

Operating conditions during test

Test under load

The shredder/chipper shall be tested chipping one or more pieces of wood.

The work-cycle consists of chipping a round piece of wood (dry pine or plywood) of at least 1.5 m length, that is sharpened at one end and has a diameter approximately equal to the maximum that the shredder/chipper is designed to accept specified in the instructions supplied to the purchaser.

Period of observation/determination of resulting sound power level

The period of observation shall end when there is no more material in the chipping area, but it shall not exceed 20 seconds. If both operation conditions are possible, the higher sound power level has to be given.

Snow removing machines with rotating tools

51.

Basic noise emission standard

EN ISO 3744:1995

Operating conditions during test

Test under load

The snow blower shall be tested in a stationary position. The snow blower shall, according to the manufacturer's recommendations, operate with the working equipment at its maximum speed and the engine at the corresponding speed.

Period of observation

The period of observation shall at least be 15 seconds.

Suction vehicles

52.

Basic noise emission standard

EN ISO 3744:1995

Operating conditions during test

Test under load

The suction vehicle shall be tested in a stationary position. The engine and auxiliary units operate at the speed provided by the manufacturer for the operation of the working equipment; the vacuum pump(s) is (are) operating at its (their) maximum speed provided by the manufacturer. The suction equipment is operated in such a way that the internal pressure is equal to atmospheric pressure (0% vacuum). The flow noise of the suction nozzle shall not have any influence on the results of the measurements.

Period of observation

The period of observation shall at least be 15 seconds.

Tower cranes

53.

Basic noise emission standard

EN ISO 3744:1995

Measurement surface/number of microphone positions/measuring distance

Measurement at ground-level

Hemisphere/six microphone positions according to Part A paragraph 5/according to Part A paragraph 5.

Measurements carried out at jib-height.

Where the lifting mechanism is located at the jib-height, the measurement surface shall be a sphere of 4 m radius, the centre of which shall coincide with the geometrical centre of the winch.

Where the measurement is carried out with the lifting mechanism on the jib stay of the crane, the area of measurement surface is a sphere;S is equal to 200 m^2.

The microphone positions shall be as follows (see Figure 53.1):

Four microphone positions on a horizontal plane passing through the geometric centre of the mechanism

$$(H = \mathrm{h}/2)$$

withL = 2.80 m

andd = 2.80 m - l/2

L = half-distance between two consecutive microphone positions

l = length of mechanism (along axis of jib)

b = width of mechanism

h = height of mechanism

d = distance between microphone support and mechanism in direction of jib.

The other two microphone positions shall be located at the points of intersection of the sphere and the vertical line passing through the geometric centre of the mechanism.

Operating conditions during test

Mounting of equipment

Measurement of lifting mechanism

The lifting mechanism during the test shall be mounted in one of the following ways. The position shall be described in the test report.

(a) Lifting mechanism at ground level.

The mounted crane shall be placed on a flat reflecting surface of concrete or non-porous asphalt.

(b) Lifting mechanism on the jib stay.

The lifting mechanism shall be at least 12 m above the ground.

(c) Lifting mechanism fixed to the ground.

The lifting mechanism shall be fixed to a flat reflecting surface of concrete or non-porous asphalt.

Measurement of the energy generator.

Where the energy generator is attached to the crane, whether or not it is linked to the lifting mechanism, the crane shall be mounted on a flat reflecting surface of concrete or non-porous asphalt.

Where the lifting mechanism is situated on the jib stay, the noise measurement may be carried out with the mechanism either mounted on the jib stay or fixed to the ground.

Where the energy source powering the crane is independent from it (electrical power generator or mains, or hydraulic or pneumatic power source), only the noise level of the mechanism winch shall be measured.

Where the energy generator is attached to the crane, the energy generator and the lifting mechanism shall be measured separately if they are not combined. Where these two devices are combined, the measurement shall refer to the whole assembly.

During the test the lifting mechanism and the energy generator shall be installed and used in accordance with the manufacturer's instructions.

Test free of load

The energy generator incorporated in the crane shall operate at the full power rating indicated by the manufacturer.

The lifting mechanism shall operate free of load, with its drum turning at the rotation speed corresponding to the maximum hook-displacement speed, in the raising and lowering modes. This speed shall be specified by the manufacturer. The greater of the two sound power levels (raising or lowering) shall be used for the results of the test.

Test under load

The energy generator incorporated in the crane shall operate at the full power rating indicated by the manufacturer. The lifting mechanism shall operate with a cable tension at the drum corresponding to maximum load (for the minimum radius) with the hook moving at the maximum speed. The load and speed figures shall be specified by the manufacturer. The speed shall be checked during the test.

Period(s) of observation/determination of resulting sound power level if more than one operating condition is used

For the measurement of the sound pressure level of the lifting mechanism, the measuring period shall be

(t_r +t_f) seconds:

t_r being the period in seconds prior to activation of the brake, with the lifting mechanism operating in the manner specified above. For the purpose of the testt_r = 3 seconds

t_f being the period in seconds between the moment when the brake is activated and that when the hook comes to a complete standstill

If an integrator is used, the integration period shall be equal to (t_r +t_f) seconds

The root mean square value at microphone position i shall be given by:

$L_{pi} = 10 \lg [(t_r\, 10^{0.1 L_{ri}} + t_f{}^{*} 10^{0.1 L_{fi}})/(t_r + t_f)]$

L_{ri} being the sound pressure level at microphone position i during period t_r

L_{fi} being the sound pressure level at microphone position i during breaking period t_f

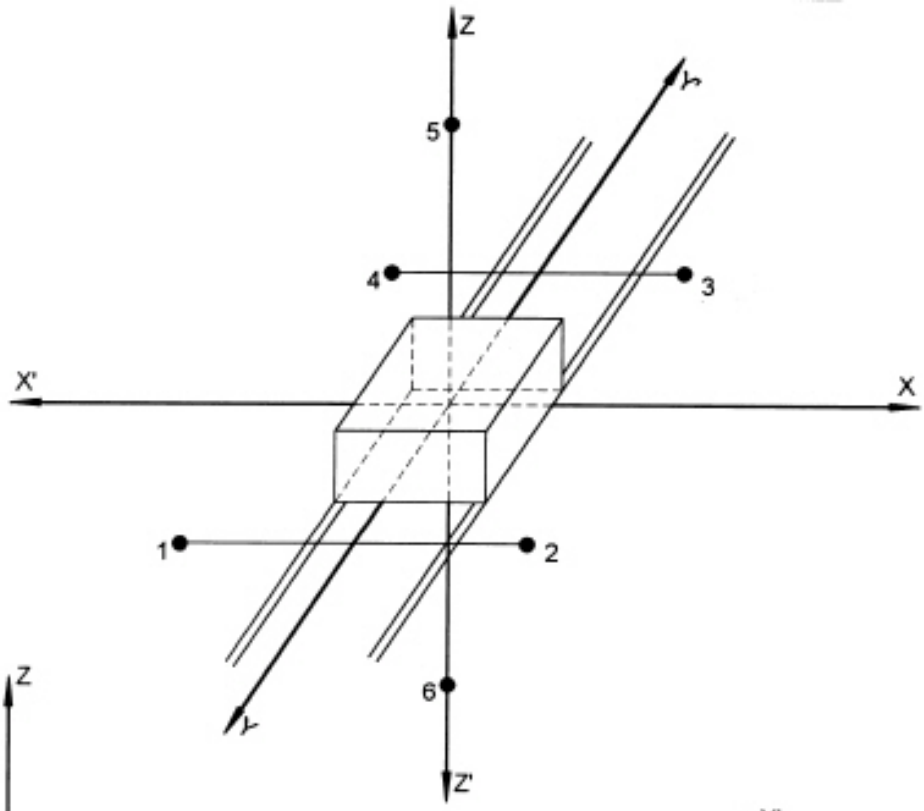
Z
5
4
3
X'
X
1
2
6
Z'

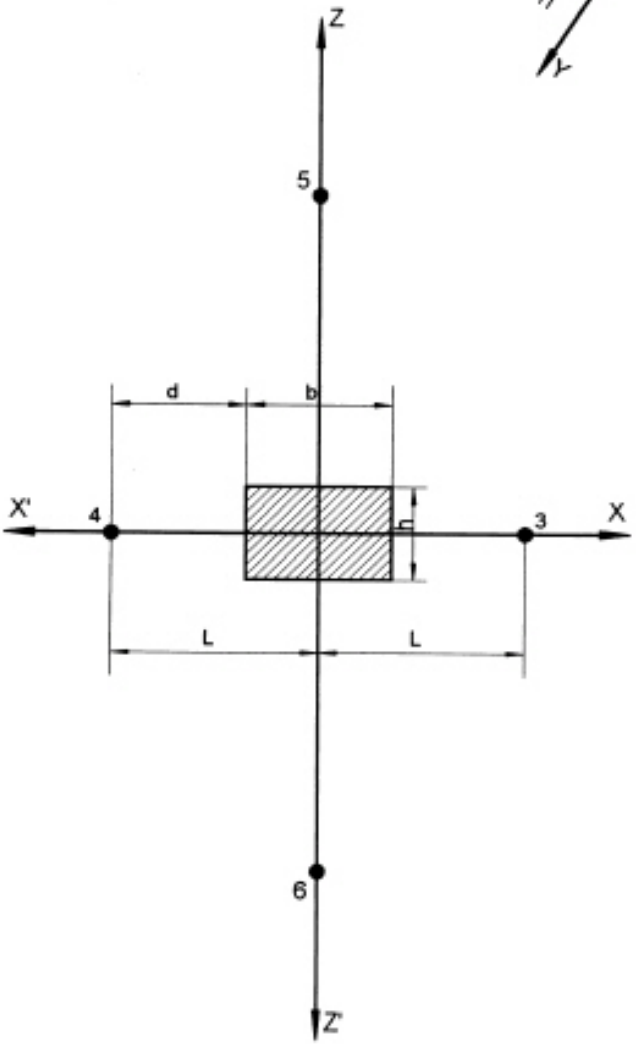
Z
5
d
b
X'
4
h
3
X
L
L
6
Z'

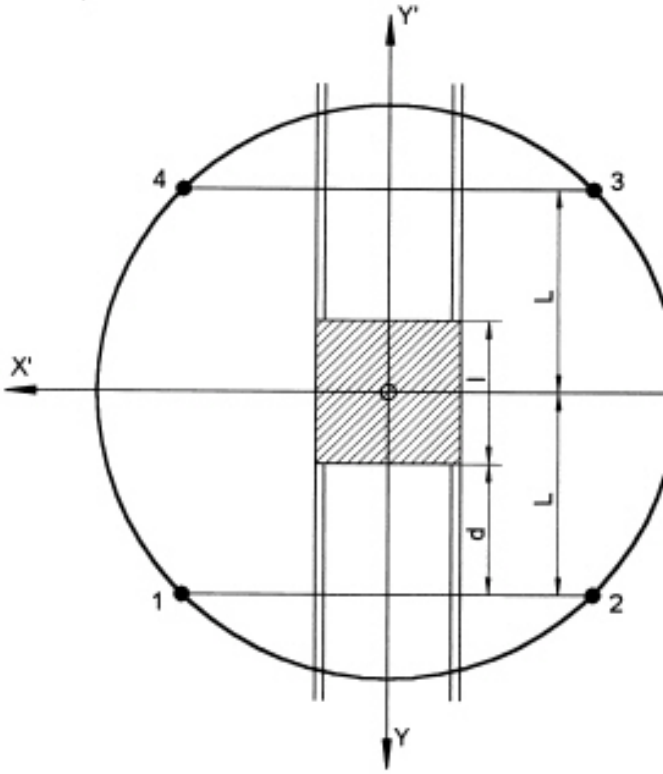
Y'
4
3
L
X'
h
L
d
1
2
Y

*Figure 53.1***Arrangement of microphone positions where the lifting mechanism is located the jib stay**

Trenchers

54. See No. 0

Truck Mixers

55.

Basic noise emission standard

EN ISO 3744:1995

Operating conditions during test

Test under load

The truck mixer shall be tested in a stationary position. The drum is filled with concrete of medium consistency (propagation measure 42-47 cm) complying to the rated capacity. The engine driving the drum shall operate at the speed that causes the maximum speed of the drum specified in the instructions supplied to the purchaser.

Period of observation

The period of observation shall at least be 15 seconds.

Water pump units

56.

Basic noise emission standard

EN ISO 3744:1995

Measurement surface/number of microphone positions/measuring distance

Parallelepiped/according to EN ISO 3744:1995 with measurement distance$d$ = 1 m

Operating conditions during test

Mounting of equipment

The water pump unit shall be installed on the reflecting plane; skid-mounted water pump units shall be placed on a support 0.40m high, unless otherwise required by the manufacturer's conditions of installation.

Test under load

The engine must operate at the point of best efficiency given in the manufacturer's instructions.

Period of observation

The period of observation shall at least be 15 seconds.

Welding generators

57.

Basic noise emission standard

EN ISO 3744:1995

Environmental correction K_{2A}

Measurement in the open air

$K_{2A} = 0$

Measurement indoors

The value of the constant K_{2A}, determined in accordance with Annex A to EN ISO 3744:1995, shall be ≤2.0 dB, in which case K_{2A} shall be disregarded.

Measurement surface/number of microphone positions/measuring distance

Hemisphere/6 microphone positions according to Part A item 5/according to Part A item 5

If l 2 m: a parallelepiped according to EN ISO 3744:1995 may be used with measuring distance d = 1 m.

Operating conditions during test

Mounting of equipment

The welding generators shall be installed on the reflecting plane; skid-mounted welding generators shall be placed on a support 0.40m high, unless otherwise required by the manufacturer's conditions of installation.

Test under load

ISO 8528-10:1998, point 9.

Period of observation

The period of observation shall at least be 15 seconds.

Changes to legislation:
There are currently no known outstanding effects for the The Noise Emission in the Environment by Equipment for use Outdoors Regulations 2001, PART B.